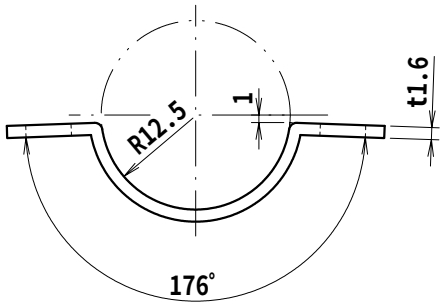
R12.5
1
t1.6
176°

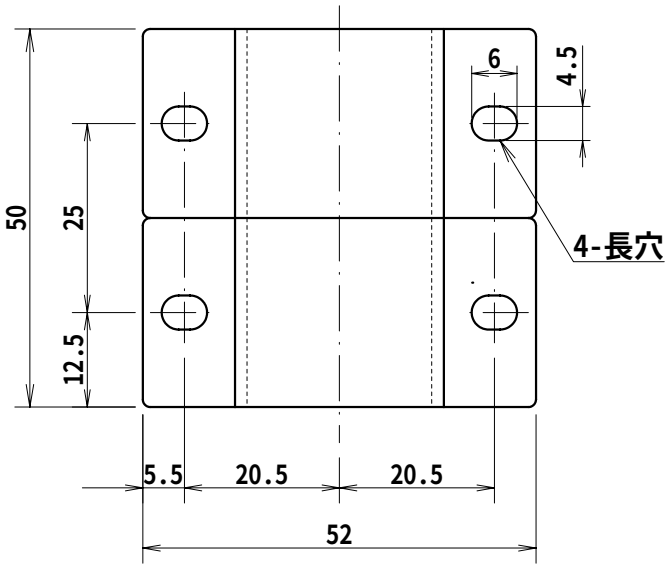
6
4.5
50
25
12.5
4-長穴
5.5
20.5
20.5
52